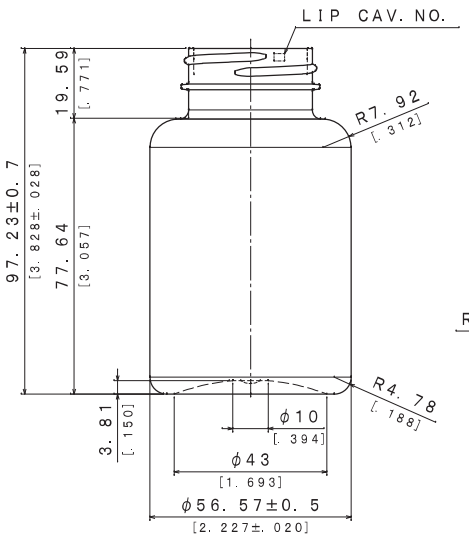

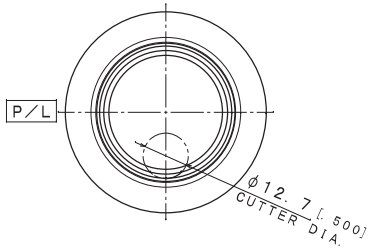

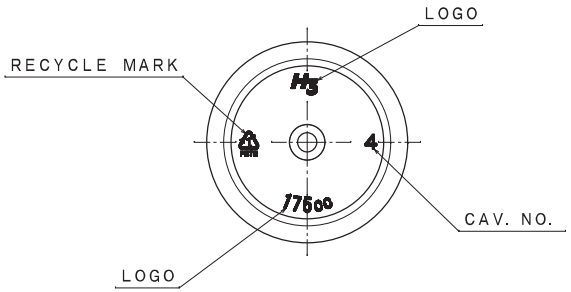

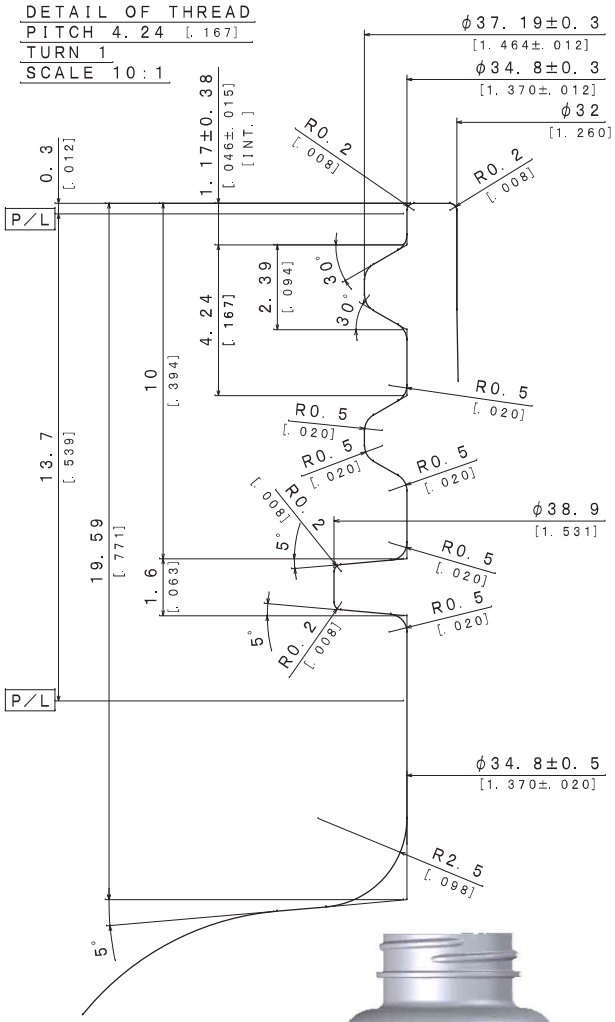

H3 PLASTICS	H3 Plastics LLC (801) 900-5738		
Scale: 1:1	Drawn By: ST	Date: 09-07-2021	
175cc Packer **38-400**		DwgRev: **A**	
Approved By: JSH	Drawing NO: AM-19728-00		
All measurements are in millimeters/inches			

Material:	PET
Neck Finish:	38-400
Overflow Capacity:	189 ± 3mL (6.391 ± .101 floz)

Min Thk:	Weight:	Color:	Std Pack:
.38mm	25.5 ± 1	All Colors	350/Tumble

REVISIONS	

Disclaimer

H3 Plastics assumes no responsibility for form, fit, and function of closures, accessories, and/or shelf life and compatibility of intended contents with this bottle.

Proprietary and Confidential

The information contained in this drawing is confidential. Any reproduction in part or as a whole without the written permission of H3 Plastics LLC is prohibited.

(A2)