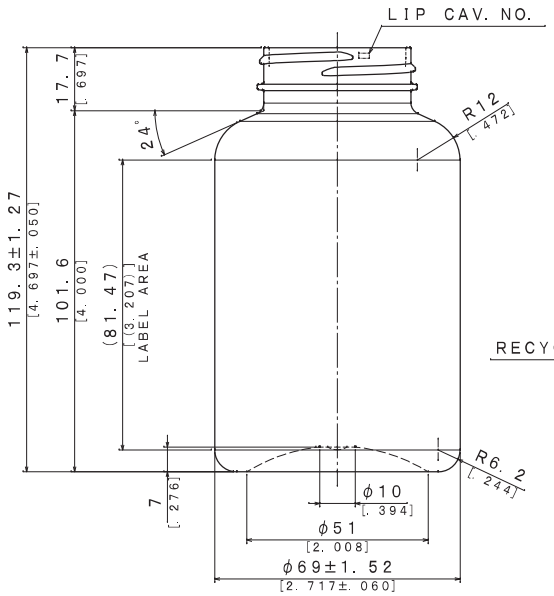

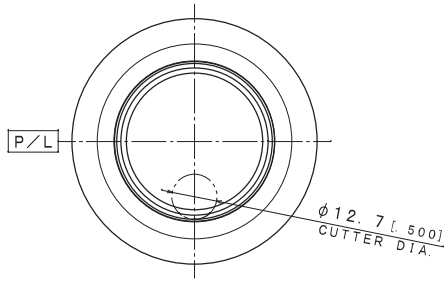

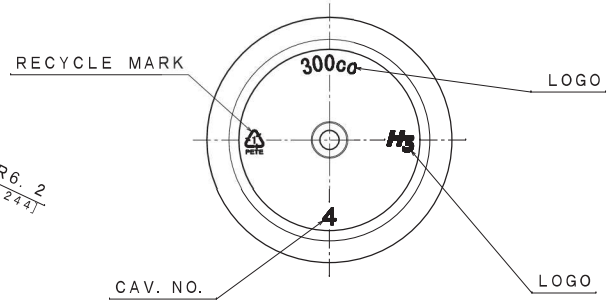

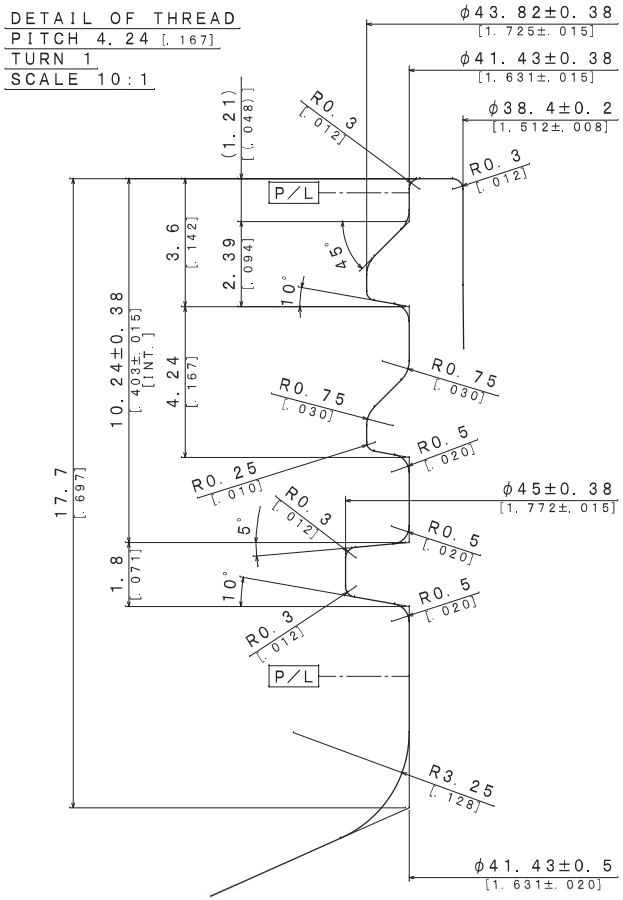

H3 PLAS

H3 Plastics LLC (801) 900-5738			
Scale: 1:1	Drawn By: MT	Date: 09-22-2021	
300cc Packer 45-400			DwgRev: A
Approved By: JSH	Drawing NO: AM-19722-00		
All measurements are in millimeters/inches			

Material:	PET
Neck Finish:	45-400
Overflow Capacity:	359 ± 9mL (12.139 ± .304 floz)

Min Thk:	Weight:	Color:	Std Pack:
.38mm	37.0 ± 1.0	All Colors	210/Tumble

REVISIONS	

Disclaimer

H3 Plastics assumes no responsibility for form, fit, and function of closures, accessories, and/or shelf life and compatibility of intended contents with this bottle.

Proprietary and Confidential

The information contained in this drawing is confidential. Any reproduction in part or as a whole without the written permission of H3 Plastics LLC is prohibited.

(A2)