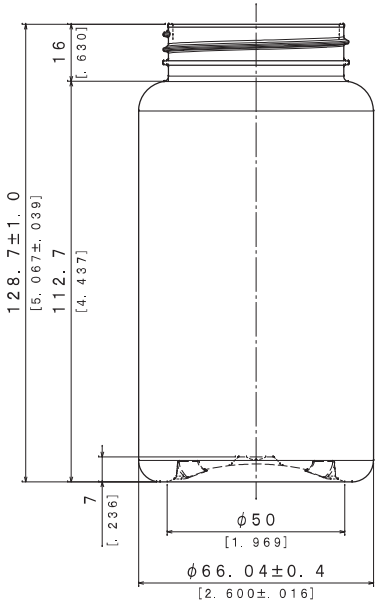

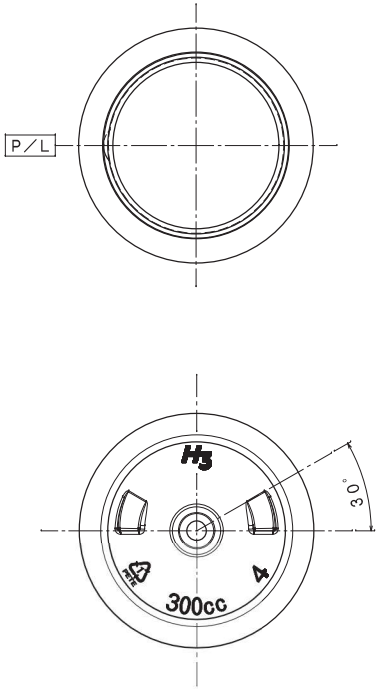

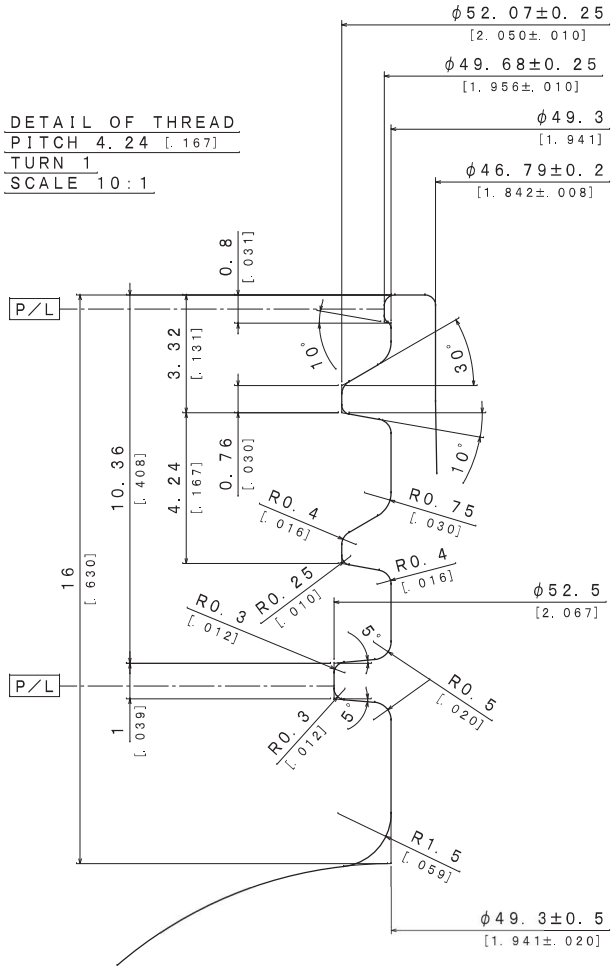

H3 Plastics LLC
(801) 900-5738

Scale: 1:1	Drawn By: YK	Date: 8/10/2022

300cc Packer
53-400

DwgRev: A

Approved By: JSH

Drawing NO: 19993-00-REF1

All measurements are in millimeters/inches

Material: PET

Neck Finish: 53-400

Overflow Capacity: 379 ± 5mL

Min Thk:	Weight:	Color:	Std Pack:
TBD	38.0 ± 2.0	All Colors	TBD

REVISIONS	

Disclaimer

H3 Plastics assumes no responsibility for form, fit, and function of closures, accessories, and/or shelf life and compatibility of intended contents with this bottle.

Proprietary and Confidential

The information contained in this drawing is confidential. Any reproduction in part or as a whole without the written permission of H3 Plastics LLC is prohibited.

(A2)